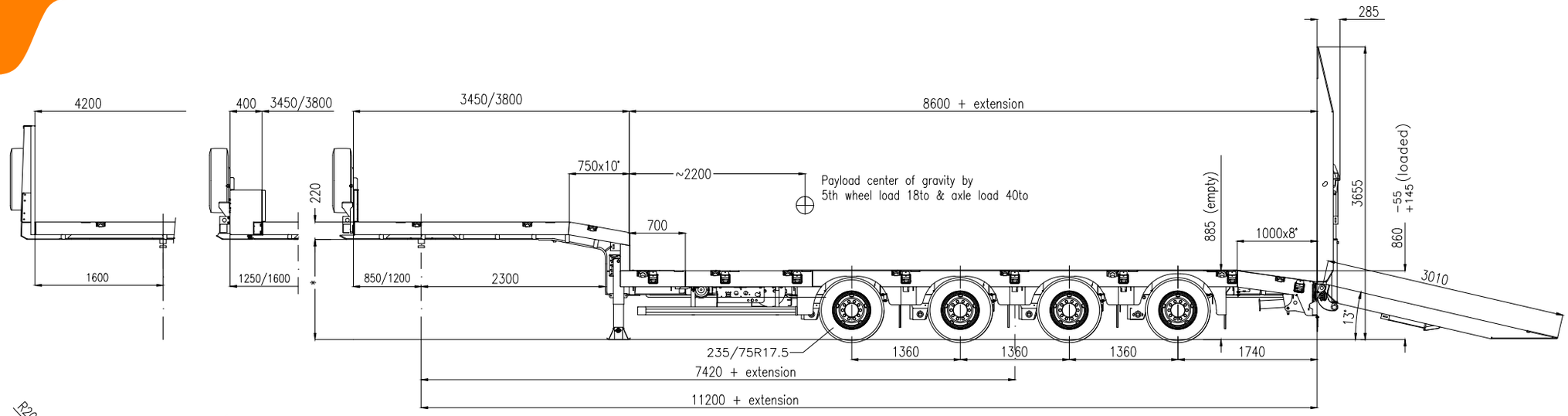

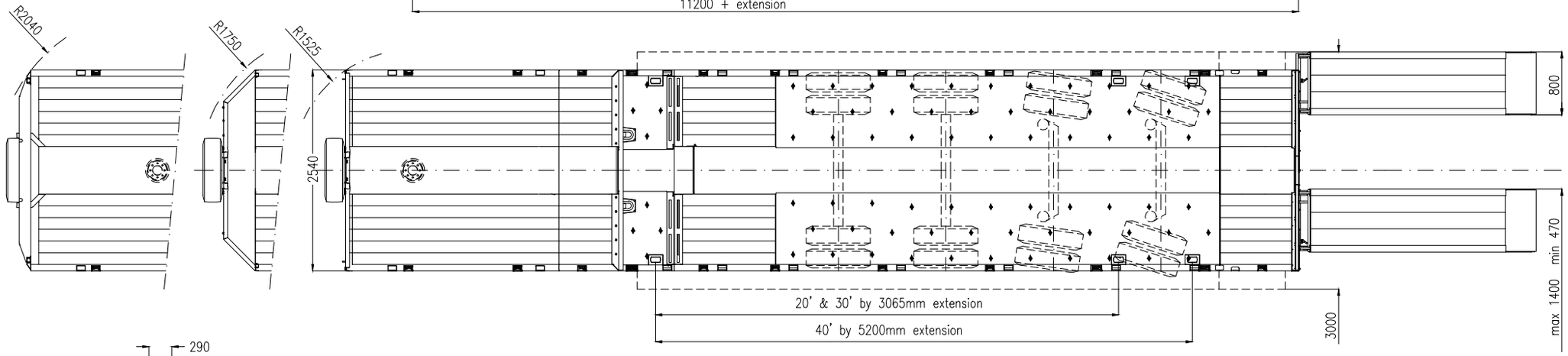

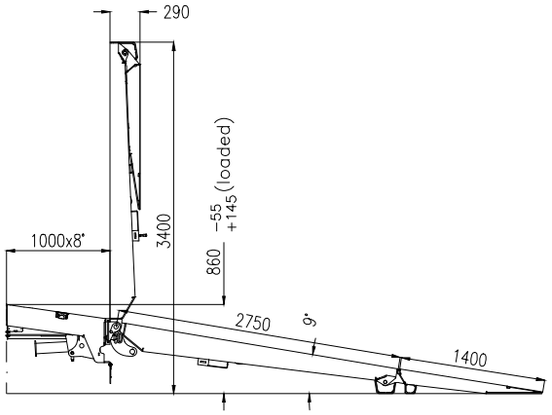

* 5th wheel height loaded
1150
1200
1250
1280
1350
1450

Extend steps (mm)	
250	250
1000	1000
2000	2000
2250	2250
3065	3065
4000	4000
4500	5200
	5400

Subject to technical changes
General tolerances according to DIN ISO 2768-c
and DIN 7168-g

1	Halslänge 3800/4200 hinzu	6/10/12	GK

Loose parts see order confirmation

Drawing :	MAX_DWG-007330		
	Date	Name	Scale
drawn :	08/03/12	JOSTENP	1:50 A3
MAX100-N-4A-8.60-U			

MAX TRAILER

This drawing is our property
Reproduction and divulgation
only with written authorization