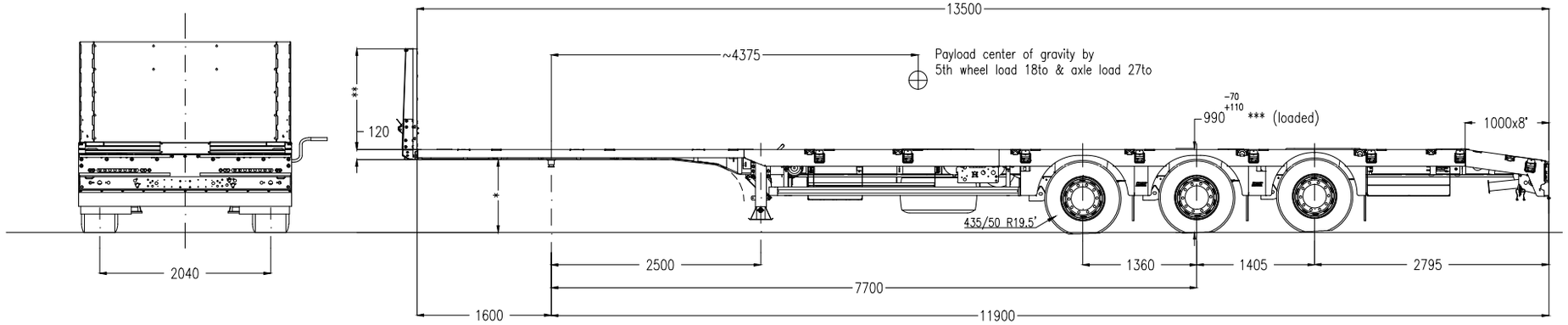

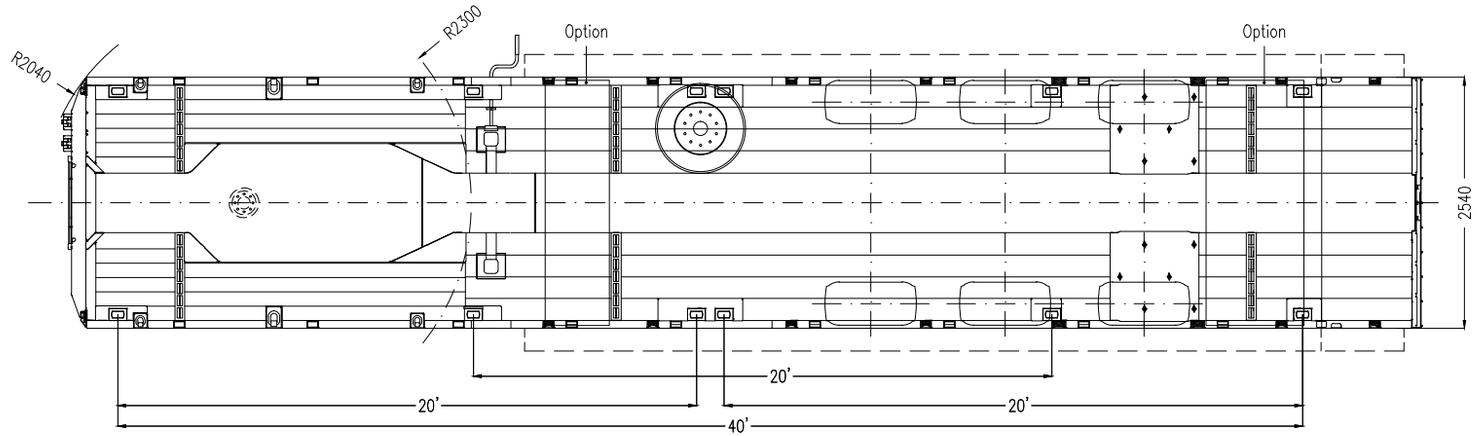

Subject to technical changes
General tolerances according to DIN ISO 2768-c
and DIN 7168-g

* 5th wheel height loaded : 950->1100
** Frontwall height : 1200-1600-2200
*** by 2nd Axle & 5th wheel height 950

Drawing : C408329-1			
	Date	Name	Scale
drawn :	23/10/12	KUPPERF	1:50 A3
MAX200-S-3-13.50-19.5-2.54			

MAX TRAILER

This drawing is our property
Reproduction and divulgation
only with written authorization

Loose parts see order confirmation